MANAGEMENT OF GAS-INSULATED TRANSMISSION LINES MAGNETIC FIELDS

M. A. Abd-Allah
Elect. Eng. Dept., Faculty of Engineering
Zagazig University (Benha Branch)

ABSTRACT: Recent worldwide attention to the harmful effects of magnetic fields emanating from power lines resulted in a growing motivation to develop methods for magnetic field mitigation aiming at reducing the possibilities of such hazards. In densely populated areas, gas-insulated transmission lines or cables offer an attractive alternative to overhead transmission lines owing to their compact nature and safety. This paper discusses the possible techniques that can be used to manage magnetic fields emanating from isolated phase system and three conductor system. Configuration modification and active shielding techniques were found to be the effective management techniques in case of isolated phase system, while, active shielding technique was the effective in the later system.

keywords: mitigation, magnetic fields, gas-insulated transmission lines or cables

I. INTRODUCTION

Compressed-gas insulated transmission lines or cables (GITL) have been in service since 1968 [1-4]. Development efforts to GITL systems from this date are continued to realize a large capacity underground transmission line which copes with the transmission capacity of an overhead lines [3,4]. Recently, increasing construction of large scale power stations and intensified consideration for environmental conservation have required long distance underground large capacity transmission lines. Due to the fact that the depth and phase-to-phase spacing are very small compared to the minimum clearance to ground and the phase-to-phase spacing of overhead transmission lines (OHTL), magnetic fields above ground level immediately above the GITL are greater than those of the OHTL and smaller than those of OHTL far from the line. Meanwhile, a great interest over the past decades around the world in the environmental and biological aspects of power frequency magnetic fields [5-9]. It is important to develop techniques to mitigate magnetic fields emanating from those GITLs.

High Voltage Engineering Symposium, 22–27 August 1999
Conference Publication No. 467, © IEE, 1999

This work considers two different configurations, the isolated phase system and the three conductor system shown in Figs. 1a and 1b respectively.

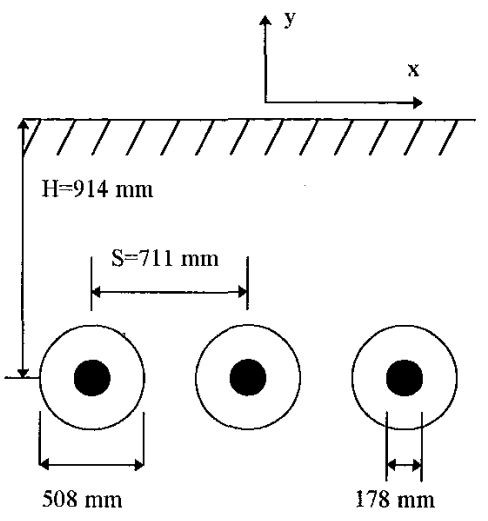

Fig. 1a Isolated phase, 500 kV GITL system

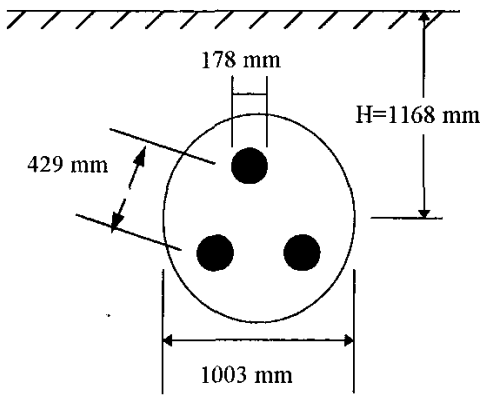

Fig. 1b Three conductor, 500 kV GITL system

II. RESULTS AND DISCUSSION

Magnetic fields are calculated based on two dimensional layout, where the GITLs buried parallel to ground surface, and a flat earth [10]. Magnetic fields are calculated assuming that the line currents are 1000.0 ampere for both GITL systems. The magnetic fields computed at 1.0 m above ground level. The lateral distances measured from the center line of GITLs.

II.1 Isolated Phase system

II.1.1 Configuration modification

The flat configuration of the isolated phase system is modified to be delta configuration or inverted delta configuration. The flat, delta and inverted delta configurations have the same minimum buried depth and phase-to-phase spacing. Fig.2 shows the effect of the line configuration modification on the magnetic field values. It is seen that the changing of the line configuration to both delta and inverted configurations causing overall decrease of fields. It is also shown that the delta configuration causes a great reduction in magnetic field values above the line, while it causes approximately the same reduction as in case of inverted delta configuration. The peak value of magnetic field is reduced by about 46% in case of delta configuration, while this reduction is about 35% in case of inverted delta configuration. At 5.0 m from the center line the magnetic field reduction is about 33% for both delta and inverted delta configurations.

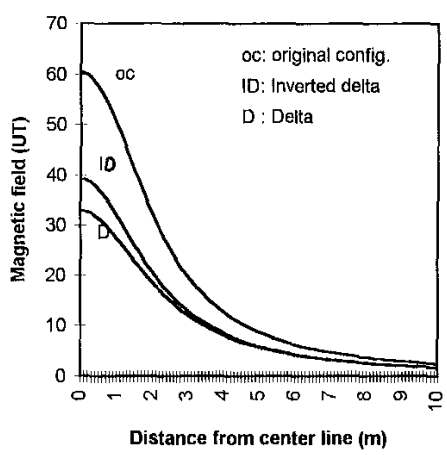

Fig.2 Effect of line configuration modification

II.1.2 Active shielding

The concept of active shield technique is based on adding buried conductors beyond the outer phase conductors, thus forming active shielding. Currents are injected in shield conductors so as to produce a magnetic field counteracting the primary magnetic field produced by phase conductors. The shield conductors currents are taken as 10% of the line currents (i.e. 100 ampere) with opposite phase angles relative to those of outer phase conductors. The effect of the depth of shield conductors, H_{sh}, and the distance of the shield conductors from the center line, D_{sh}, on the magnetic field values are shown in Fig.3. It is noticed that the magnetic field reduction above the central phase conductor decreases by increasing the depth of shield conductors. The magnetic field reduction at lower shield conductors depth decreased by increasing the distance of shield conductors from the center line till about 80 cm depth of the shield conductors beyond this depth the reverse is true.

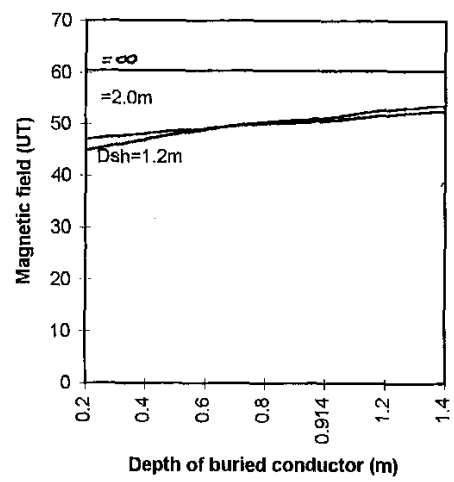

Fig.3 Effect of shield conductors locations

Fig.4 shows the effect of shield conductor distance from center line of the GITL on the maximum magnetic field values at different depth of shield conductors. The magnetic field reduction decreases as the distance from center line increases at the smaller shield conductors depth, while it increases when the depth of the shield conductors is equal or greater than the phase conductors depth. At 20 cm shield conductor depth, the magnetic field reduces by about 26% when. the shield conductors distances from the center line is 1.2m, while this reduction is about 22% when this distance becomes 2.0m. When the shield conductor depth is equal to the phase conductors depth, those reductions become 15% and 16%, respectively.

The effect of shield conductors depth and distances from center line of GITL on the magnetic field values at 2.0 m away from the center line is shown in Figs.5 and 6. It is seen that, as the depth of the shield conductors increased the reduction in magnetic field values decreased. While, as the distance of shield conductors from center line increased the reduction

in magnetic field values increased. At 20 cm shield conductor depth, the magnetic field reduces by about 19% when the shield conductors distances from the center line is 1.2m, while this reduction is about 29% when this distance becomes 2.0m. When the shield conductor depth is equal to the phase conductors depth, those reductions become 13% and 18%, respectively.

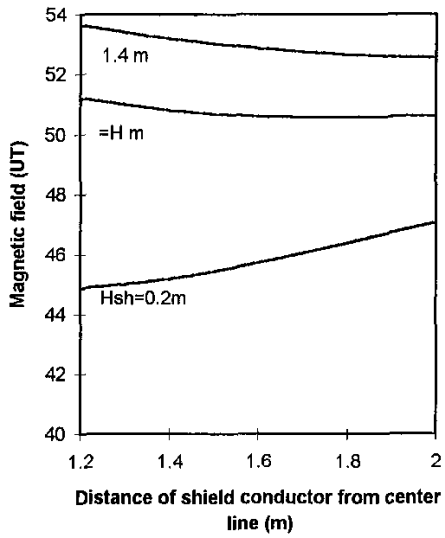

Fig.4 Effect of shield conductors locations

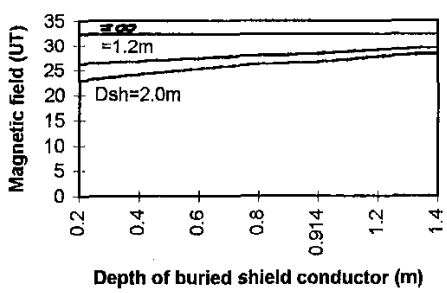

Fig.5 Effect of shield conductors locations at 2.0m away from center line

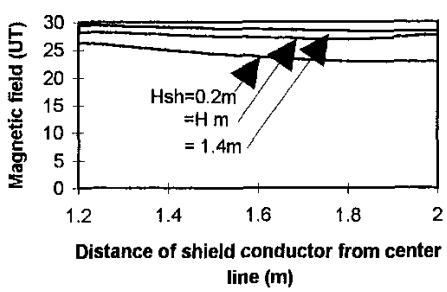

Fig.6 Effect of shield conductors locations at 2.0 m away from center line

II.1 Three Conductor System

Configuration modification technique is applied to this system of GITL and the all results indicate that the maximum reduction in the maximum magnetic field values is about 0.27%, in magnetic field values at 2m away from center line is about 0.8% and at 5m away from the center line is about 0.005%. These reductions are very small to be considered, thus, this technique is not effective in magnetic field reduction for three conductor system. Phase splitting technique is also applied and a maximum reduction in maximum magnetic field values of about 0.6% is obtained. Active shielding technique is the only technique gives a considerable reduction in magnetic field values for this system.

II.1.1 Active shielding

By adding two conductors at the same distance from center line and in opposite direction along the horizontal line passing by cable center. The shield conductors currents are taken as 10% of the line currents (i.e. 100 ampere) with opposite phase angles relative to those of outer phase conductors.

The effect of shield conductors distance from center line with respect to phase-to-phase spacing on the magnetic field values at center line and at 2.0m away from center line is shown in Fig.7. It is seen that the reduction in magnetic field values is slightly increased as the distance of shield conductors increased. The magnetic field reduction in the maximum field values with using the active shielding is found to be about 18% and 14% at 2.0 m away from the line.

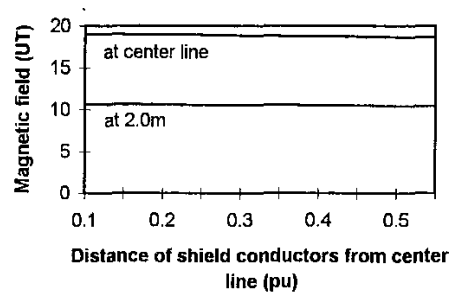

Fig.7 Effect of shield conductors locations

Fig.8 shows the effect of shield conductors movement up and down from the horizontal line passing by the center line with respect to phase-to-phase spacing on the magnetic field values at center line and at 2.0m away from center line. The negative sign indicates

that the shield conductors move up and vice versa. It is seen that the reduction in magnetic field values is slightly increased as the shield conductors depth varies.

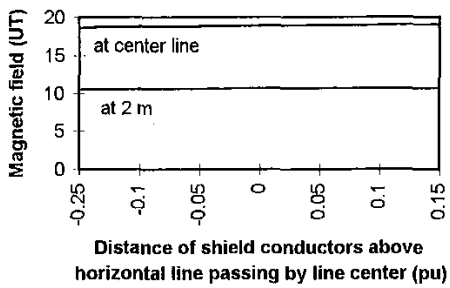

Fig.8 Effect of shield conductors depth

The shielding conductors rotate around the central point through 360° anticlockwise. the distances of the shield conductors from the center line are kept constant at 20 cm. It is found that the horizontal position of the shield conductors gives the maximum field reduction.

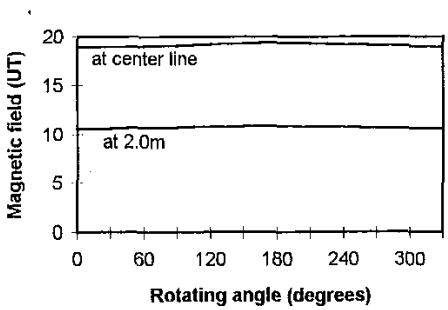

Fig.9 Effect of shield conductors location

III. CONCLUSIONS

1. Configuration modification is an effective technique in reducing the magnetic field levels of isolated phase system.
2. The reduction in the maximum field values can be as high as 46% in delta configuration and also can be as high as 35% in inverted delta configuration.
3. Active shielding also reduced effectively the magnetic field values of isolated phase system.
4. In case of three conductor system, active shielding is found to be the only effective technique in reducing the magnetic field values.
5. The best practical position of the shielding conductors is at the horizontal line passing by GITL center.

IV. REFERENCES

1. Alan H. Cookson, "Gas-Insulated Cables", IEEE Trans. on Electrical Insulation, EI-20, No.5, Oct. 1985.
2. A. Eriksson, K. G. Pettersson, A. Krenicky, R. Baker, J. R. Ochoa and A. Leibold, "Experience With Gas Insulated Substations in The USA", IEEE Trans. on Power Delivery, Vol. 10, No. 1, pp. 210-218, 1995.
3. Y. Kuroyanagi, et. al., "Construction of 8000 A Class 275 kV Gas Insulated Transmission Line", IEEE PES 89 SM 637-0 PWRD.
4. T. Nojima, et. al., "Installation of 275 kV-3.3 km Gas-Insulated Transmission Line For Underground Large Capacity Transmission in Japan", CIGRE, Paris, Paper 21/23/33-01, 1998.
5. P. S. Wong, T. M. Rind, S. M. Harvey and R. R. Scheer, "Power Frequency Electric and Magnetic Fields From a 230 kV Gas-Insulated Substation", IEEE Trans. on Power Delivery, Vol. 9, No.3, July 1994.
6. P. H. Pretorius, "An attempt to Quantify The Suggested Risk Associated With Power Frequency Magnetic Field Exposure", CIGRE, Paris, Paper 36-101, 1996.
7. R. Conti, L. D'Ajello and P. Nicolini, "ENEL's Experience in Assessing Occupational and Residential Exposure to Power Frequency Electric and magnetic Fields", CIGRE, Paris, Paper 36-104, 1996.
8. O. Bottauscio and R. Conti, "Magnetically and Electrically Induced Currents in Human Body Models by ELF Electromagnetic Fields", 10th International Symposium on High Voltage Engineering (ISH), Quebec, Canada, Session TS1, 1997.
9. A. Ahllbom, "Cancer and Residential Exposure To Weak Extremely Low Frequency Magnetic Fields", CIGRE, Paris, Panel 1-01, 1994.
10. IEEE Magnetic Fields Task Force, "Magnetic Fields From Electric Power Lines: Theory and Comparison to Measurements", IEEE Trans. on Power Delivery, Vol.3, No.4, pp. 2127-2136, Oct.1988.

author address
Dr. Mousa A. Abd-Allah
Electrical Engineering Dept.
Faculty of Engineering
108 Shoubra street
Shoubra, Cairo, Egypt.